CASE FINISH	CURRENT (AMPS)	WORKING VOLTAGE				MAXIMUM DC RESISTANCE (OHMS)	MAXIMUM VOLTAGE DROP		MINIMUM CAPACITANCE (uF)	MIN. INSERTION LOSS PER MIL-STD-220, FULL LOAD, +25°C												
		-55°C TO +85°C		-55°C TO +125°C																		
		AC	DC	AC	DC		DC	AC		14 KHz	30 KHz	50 KHz	75 KHz	100 KHz	150 KHz	300 KHz	500 KHz	1 MHz	10 MHz	100 MHz	1 GHz	10 GHz
SOLDER	15	--	80	--	50	0.003	0.045	--	1.4	--	15	--	--	--	28	33	--	44	60	--	70	--

PART MARKING:

SCI-1020-000 (FAIRVIEW)
SCI-1020-000 M (MEXICO)
50 VDC DATE CODE

PACKAGE MARKING:

BLISTER PACK.

SCI-1020-000
50 VDC
DATE CODE
QTY.: 50 (MAX.)

MARKING NOTES:

N/A

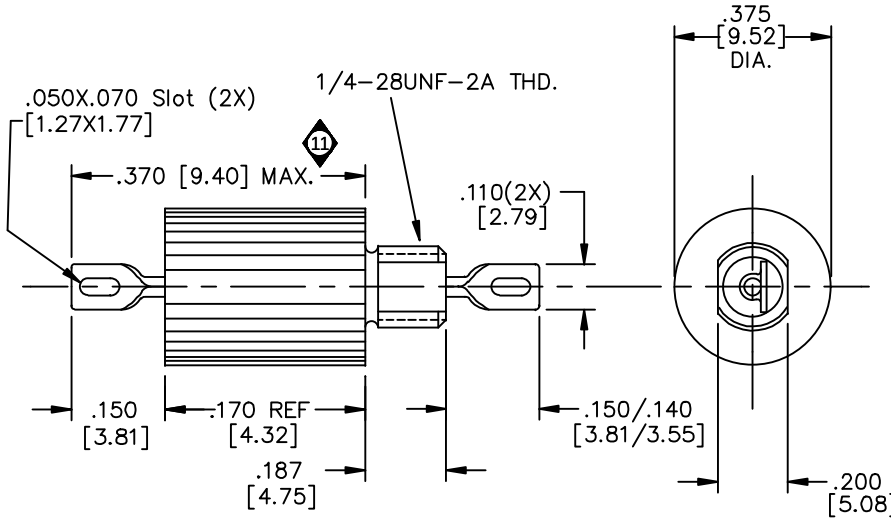

SCHEMATIC

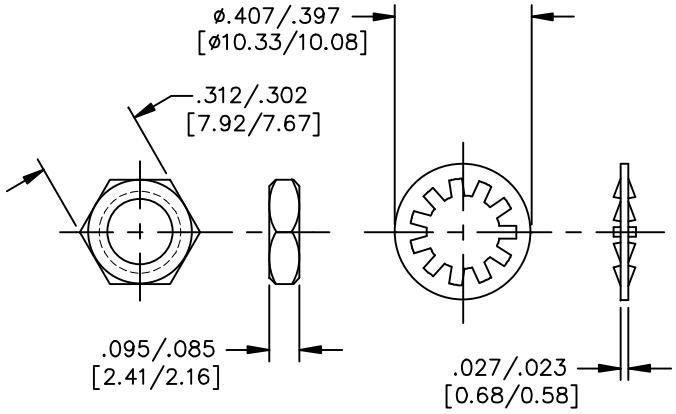

MTG. HARDWARE

NOTES:

1) MOUNTING TORQUE NOT TO EXCEED 7in-lbs.

REV. NO.	CHANGE NOTICE
11	CN 69749-ENG
10	CN 51880-ENG
9	CN 41027-ENG
8	CN 26026-CPD
7	CN. 206610
6	CN. 183605
5	CN. 159297

UNLESS OTHERWISE SPECIFIED DIMENSIONS ARE IN INCHES. [MILLIMETERS]

DO NOT SCALE.

TOLERANCES UNLESS OTHERWISE SPECIFIED
Fractions ±
Dec. .xx±
Dec. .xxx± .010
Angles ±0° 30'

CODE IDENT. NO. OLSP2

api technologies corp.

FAIRVIEW PENNSYLVANIA

Dwn. MAYNARD
Date 7-29-13
Engr. B. DEVINE
Sheet 1 of 1

Description Low Pass EMI Filter

SCI-1020-000

Quality Products From The Specialists In Electro-Magnetic Compatibility