PACKAGE OUTLINE

DO-8 (DO-205AA)

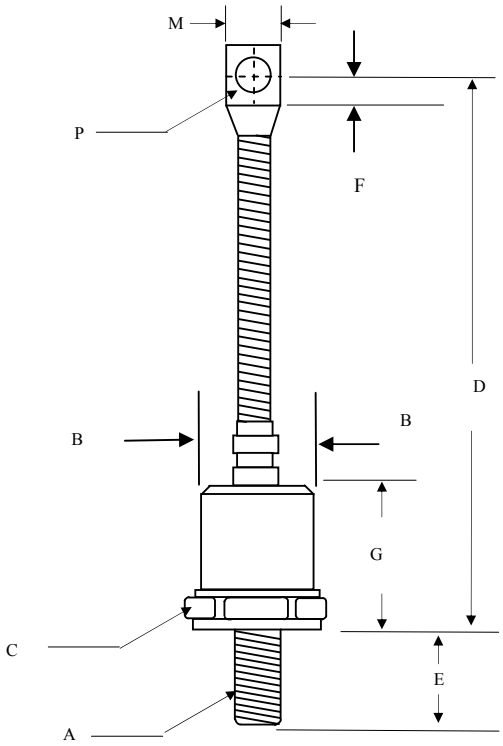

	Inches		Millimeters	
	Min Ma	x	Min	Max
A 3/8-	24 UNF			
B ----	-	φ 0.930 --	---	φ 23.5
C 1.	050	1.060	26.67	26.92
D 4.	300	4.700	109.22	119.38
E	----- 0.	690	----- 17.	00
F	0.260	----- 6.	50 ----	-
G	----- 0.	940	----- 24.	00
J	----- -	---- --	---	-----
M	----- 0.	600	----- 15.	23
N	----- -	---- --	---	-----
P 0.	276	0.286	7.010	7.260

Dimensions in inches and (millimeters)