CASE FINISH	CURRENT (AMPS)	WORKING VOLTAGE -55°C TO +85°C AC	WORKING VOLTAGE -55°C TO +85°C DC	WORKING VOLTAGE -55°C TO +125°C AC	WORKING VOLTAGE -55°C TO +125°C DC	MAXIMUM DC RESISTANCE (OHMS)	MAXIMUM VOLTAGE DROP DC	MAXIMUM VOLTAGE DROP AC	MINIMUM CAPACITANCE (uF)	MIN. INSERTION LOSS PER MIL-STD-220, FULL LOAD, +25°C 14 KHz	30 KHz	50 KHz	75 KHz	100 KHz	150 KHz	300 KHz	500 KHz	1 MHz	10 MHz	100 MHz	1 GHz	10 GHz
SILVER	15	---	80	---	50	0.005	0.075	---	1.4	--	15	--	--	--	28	34	--	44	60	70	70	--

PART MARKING:

51F-717-001
SCI DATE CODE

PACKAGE MARKING:

BUBBLE PACK:
SCI 51F-717-001
DATE CODE
LOT NO.
QTY.

MARKING NOTES:

N/A

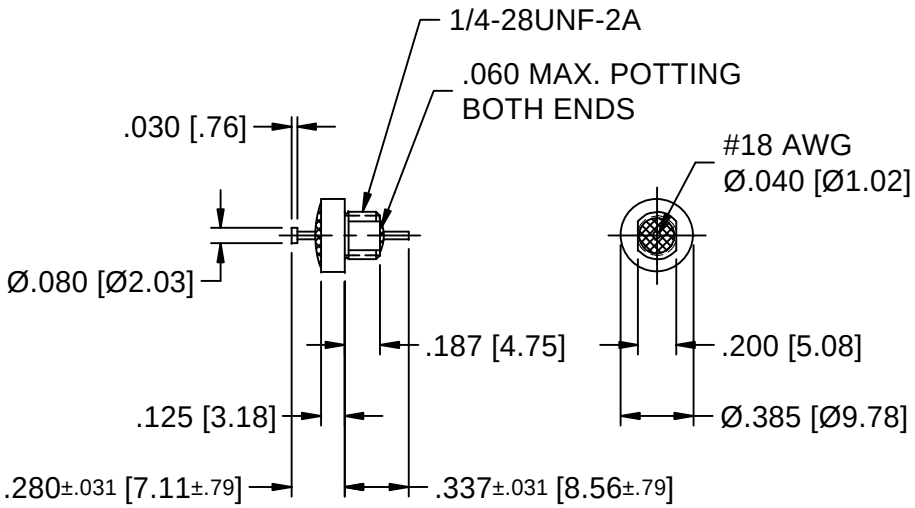

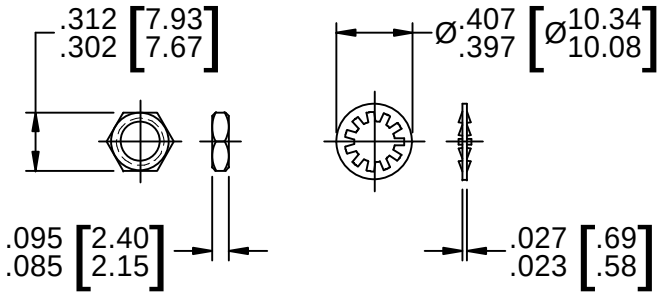

MTG. HARDWARE

SCHEMATIC

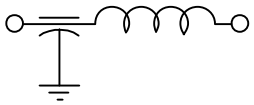

NOTES:
1) MOUNTING TORQUE NOT TO EXCEED 7 in-lbs.
2) THIS IS A LEAD FREE PRODUCT
3) MAX. REFLOW IS 245°C FOR 5 SECONDS

RoHS COMPLIANT

01

REV. NO.	CHANGE NOTICE
01	CN 30515-CPD
00	CN 17435-CPD

UNLESS OTHERWISE SPECIFIED DIMENSIONS ARE IN INCHES [MILLIMETERS]

DO NOT SCALE

TOLERANCES UNLESS OTHERWISE SPECIFIED
Dec. .x ± .x
Dec. .xx ± .xx
Dec. .xxx ± .010
Angles ± 0° 30"

CODE IDENT. NO. 0LSP2

SPECTRUM CONTROL INC.

FAIRVIEW PENNSYLVANIA

Dwn. Hassett
Date 4-20-05
Engr. D. REILLY
Sheet 1 of 1

Description: LOW PASS EMI FILTER

51F-717-001

Quality Products From The Specialists In Electro—Magnetic Compatibility